OFFSHORE TECHNOLOGY CONFERENCE
6200 North Central Expressway
Dallas, Texas 75206

PAPER
NUMBER OTC 2168

THIS PRESENTATION IS SUBJECT TO CORRECTION

Design, Analysis and Construction of the Research Platform “Nordsee”

By
Hans G.Payer, Germanischer Lloyd and Wolf-Dieter Longrée, IMS

References and illustrations at end of paper

ABSTRACT:

The paper first describes the functional considerations leading to the rather unconventional design of the ocean platform “Nordsee”. Then the structural analysis ranging from the static and dynamic global analysis to detailed finite element calculations of the tubular joints is outlined. An account of the method of construction and assemblage is finally followed by a description of the instrumentation of the platform with strain gages and accelerometers and the structural research work to be carried out with it.

1. INTRODUCTION

A spot in the German Bay, approximately 40 sea miles to the northwest of the island of Helgoland in the North Sea is the site chosen for the erection of the research platform “Nordsee”. The mean depth of the waters there is 30 meters.

The contract for developing a fixed research platform for the North Sea was awarded by the Ministry of Research and Technology of the Federal Republic of Germany at the end of 1972. Following the development and design phase the contracts for construction of the platform were placed in the fall of 1973. All structural components were ready for assemblage in the fall of 1974. As bad weather in the North Sea at that time prevented the completion of the erection, only the foundation and the lower part of the tubular structure have been installed at the site. The upper parts are scheduled to be brought to the site and erected in the spring of 1975.

The objectives and anticipated functions of the research platform are rather diverse and several federal and state agencies will cooperate in carrying out the activities. Only a brief outline of the research tasks shall be given here. With the platform as a base, extensive data is scheduled to be collected on physical, chemical and biological topics of oceanography and marine biology. Continuous measurements related to the sea and weather conditions will be made. As a central part of the oceanographic measuring network for the North and Baltic Seas, the platform will serve as a testing site for automatic sea data acquisition systems. The measuring instruments for the determination of the oceanographic parameters, as well as large buoys designed as carriers for the instruments may be tested here under operational conditions. In addition, the platform will also function as a basis for research into the behavior of sound in the sea under natural conditions. Finally, the structural behavior of the platform itself is a subject of research. As will be described in more details later in this paper, the platform is equipped extensively with strain gages and accelerometers. Comparisons of results from measurements with this equipment with results from theoretical calculations is expected to furnish valuable information in areas of uncertainty in the analysis of the structural behavior of ocean platforms in the marine environment.
The design of the platform was made by IMS (Ingenieurgemeinschaft Meerestechnik + Seebau, GmbH) of Hamburg, Germany, who also acted as general contractors. The German Association for the Use of Nuclear Energy in Shipbuilding and Shipping (GKSS) were supervising the project for the ministry. Germanischer Lloyd acted as surveying and classification society.

2. THE DESIGN

The overall design of the platform configuration reflects the basic requirement that the natural hydrodynamic conditions of the sea are affected as little as possible, especially in the vicinity of the waterline. This leas to a rather unusual design of the tubular supporting structure, with four heavy corner legs, only two diagonal braces on each side above the waterline and a more complex bracing structure below. The deck house with a main deck and two decks for laboratories, conference rooms and living quarters below has dimensions of 26.4 by 26.4 meters and is located 20 m above the sea level. An overall view of the platform can be seen in Fig. 1. A more detailed description of the design can be found in [1] and [2].

The foundation

After extensive preliminary investigations into various possibilities for the foundation a gravity foundation of the following type was developed and adopted:

The octagonally shaped, cross stiffened, hollow foundation of reinforced concrete of approximately 75 m diameter and 4.5 m depth is designed as a buoyant body. Once the foundation was towed to the site, the buoyant cells were flooded. The weight of the foundation plus the tubular structure is sufficient to hold the platform in place, hence there is no need for additional ballasting in the final state. The load transfer from the tubular structure through the foundation to the sea bed is effected by grouting eight spaces provided in the foundation below the eight footing joints of the steel frame. The edges of the foundation are beveled to achieve improved hydrodynamic flow conditions. The foundation is fitted with articulated scouring plats, which adjust themselves to any existing unevenness of the sea bottom.

The geological conditions of the sea bed are characterized by the conditions of the primeval river bed of the river Elbe. The sea bottom of the selected building site was explored by divers, sounding and drilling. Under a thin layer of sand there is a zone of sandy clay of approximately 5 meters thickness. Under the clay preloaded sands from the ice age were encountered. Some 13 meters below the sea bottom there is a layer of boulders, followed again by sand. The clay is expected to provide protection against local as well as more extensive changes of the base. The layer of boulders, as well as the flatness and levelness of the ground were the main reasons for choosing a gravity foundation as described above for the platform.

Tubular Steel Structure

For reasons of simplification of the construction process which shall be described below, the steel structure was divided into two parts, the upper and lower structure. The interface between the upper and lower structures is placed 4.5 meters above the mean sea level, which is high enough to allow the work of connecting the upper to the lower structure to be carried out at sea above the normal waves.

The framework of both, the upper and lower structure consists of steel tubes of 1016 and 1420 millimeters diameter and of thicknesses of from 22.2 to 30 millimeters. In the regions of the joints heavier joint cans of up to 55 m thickness were introduced. In order to avoid overlapping of the braces, the diameter of the chord of the joints just above the waterline were designed wider, with a diameter of 2.1 meters. Although some of the joints have rather complex geometry, they are without any stiffening rings, gusset plates, etc. The tubular members are welded together with all load being transferred from one branch to the other via the chord.

Besides meeting the requirement of disturbing the surface condition of the sea as little as possible, the character of the lower structure is determined, to a large extent, by the gravity foundation. This type of foundation allows a nearly circular arrangement of the lower structure. In order to increase the area of the foundation and reduce the axial forces in the tubular members, the legs are arranged in inclined positions. The additional requirement for high probability to survive damage from a possible collision of a ship with the platform necessitated at least four corner legs for the upper structure. For reasons of transportation these legs were arranged vertically.

Decks and Superstructures

The design and layout of the decks is determined largely by the functional requirements. The main deck provides space fro work requiring large working area. Bulky parts may be stored here temporarily. A central opening (comparable to a moon pool) is fitted in all decks to facilitate the conduction of research work. There is a winch installed for it in the main deck. In addition the central opening can also be served by tow cranes. The openings can be covered by hatch covers at each deck level. The helicopter landing platform is elevated and, for safety reasons, only the antenna mast projects above it, so that the pilot only has to watch this obstacle when landing and taking off. Life saving equipment as well as a working boat are, of course, provided too. Engine rooms and workshops are situated on the upper deck, just below the main deck and are easily accessible through hatch openings in the main deck. Excellent sound proofing was considered of greatest importance here. The rest of the arrangement of the deckhouse was generally laid out in accordance with the wishes and requests of the final users and operators. All living quarters are, on principle, provided as single rooms in the lower deck; they may, however, be used by two persons if necessary. As a maximum, 16 scientists may be accommodated at the same time. A crew of six persons will, in addition, be responsible for the operation of the platform. Fuel and lubricating materials, as well as fresh and waste water, are stored in double bottom tanks below the lower deck. As the study of the marine fauna and flora must not be affected, the waste water can be purified.

3. ANALYSIS

The structural analysis of the platform is performed in two steps. First a spatial frame analysis is made of the overall structure. The idealization used in the calculations is shown in Fig. 2. The deckhouse is approximated by a rough finite element mesh representing the major structural components only. The supporting structure is subdivided into a large number of beam elements so that loads exerted by wind, waves and currents can be applied in close agreement with the actual loading to be expected.

It is theoretically, of course, possible to perform an analysis for fixed platforms in a similar manner as it is done frequently today for ships or floating ocean platform. Following an analysis of the response of the structure to regular waves, statistical inferences can be made about the maximum stresses as well as the fatigue life to be expected for the service period, on the basis of statistical descriptions of the sea environment of the planned operating area. Calculations of this kind are planned for the platform “Nordsee” to form a basis for comparison with the measurements to be made. However, the actual stress analysis of the design was conducted according to a refined “design wave” concept.

Static and quasistatic calculations were made for about 30 different loading conditions varying in wave height, wave direction, wind velocity, changing movable loads, temperature and ice loads. The decisive load combination includes a wave of 25 m wave height, which has a probability of occurrence of once in a hundred years for the area of the selected site for the platform.

The calculations include a load case simulating a ship collision defined as uncontrolled movements of a supply vessel with a quasistatic horizontal force of 250 metric tons. Finally, the condition with one of the four upper corner legs missing is considered as the catastrophic situation after impact from a larger vessel.

Stresses in legs and bracing system are computed from forces and moments determined in this step of the analysis, and are compared to allowable stresses set with different factors of safety depending on the probability of occurrence of the load combination considered. For the steel structure, safety factors against yielding range from 1.7 for operational loads, to 1.3 for extreme loads and 1.15 for the catastrophic case mentioned. Stability conditions are also checked at this stage.

In addition to static and quasistatic computations, the dynamic behavior of the platform is analyzed using the same structural model. The added hydrodynamic masses for the under water structure are included in the total mass matrix and the eigenvalue problem is solved for the lower modes of natural vibrations. The lowest natural frequencies for the platform were found to be near 2.5 cps. Large energy of excitation is not expected from the seaways in this frequency range. Besides this overall dynamic response a possibility exists for excitation of local vibrations of single bracing elements due to vortex shedding in the waters in motion from waves and current.

There are several uncertainties in this part of the analysis, such as structural flexibility in the joints, which as yet is not accounted for in the computations, structural and hydrodynamic damping and others. As will be described below, the objectives of part of the experimental program scheduled for the platform are to spread light on some of the uncertainties mentioned.

The second step in the analysis is the detailed investigation of the stress distribution in the tubular joints. There is considerable experience at hand with regular T, Y and K connections, see for instance [3]. Empirical and semi-empirical design criteria are available, such as the punching shear concept. In it, as is probably well known, the average punching shear stress acting on the potential failure surface is computed, taking account of axial forces and bending moments, and is compared to allowable values which are determined as a function of the yield point of the material and the radius-to-thickness ratio of the chord. The majority of the joints found in the research platform “Nordsee” can not be classified clearly as belonging to either of the above mentioned types. Therefore the application of the described empirical relations is questionable and a detailed analysis, by the finite element method, was found necessary to determine the adequacy of the joint scantlings.

An axonometric view of the finite element model of the joint in the vicinity of the waterline, showing the vertical leg and the upper and lower diagonal braces is shown in Fig. 3. For several severe load cases the forces and moments determined in the spatial frame analysis are applied to the ends of the tubes idealized. This is a rather extensive model, built of shell-bending elements. It comprises 1504 nodes, 1492 elements and has 5878 degrees of freedom with a bandwidth of 612.

As an example of results obtained, the distribution of equivalent stresses in accordance with the von Mises strength hypothesis on the outer surface of the leg in the vicinity of the welding seams of the upper diagonal braces are presented in Fig. 4. The steel used here has, for the plate thicknesses in the range of 50 mm, a guaranteed yieldpoint of 34 kp/mm². Under the extreme loading condition for which results are shown the material is actually stressed locally beyond the elastic limit. This is, however, deemed acceptable in tubular joints, which have a considerable reserve of strength even after yielding is reached in the most highly stressed zones, the so called hot spot area.

Similarly detailed analysis were made, too, for the other types of joints encountered in the design, with resulting hot spot stresses for the maximum loads again near to the yield stress of the material.

The results obtained by the finite element calculations were compared with results from the simple punching shear relation. This comparison showed fairly good agreement for the simpler joints inasmuch as forces which, according to the finite element analysis, produced stresses locally beyond yielding in the hot spot areas, lead to a punching shear stress only slightly below the corresponding allowable limit. These findings would confirm that the use of the punching shear relation is generally sufficient for the analysis of joints with simple geometry. No such clear correlation was found, however, for the complex joints near the waterline described above.

4. CONSTRUCTION AND ASSEMBLY

The layout of the construction and assembly phase for the platform was developed specifically for the generally rough weather conditions in the North Sea. The two main objectives here were to transfer the construction work as far as possible from the site at sea to sites on land and to reduce critical phases of assembly and erection at the site at sea to a minimum.

The deckhouse, the upper and the lower tubular steel structure, as well as the foundation body were produced as separate units. The concrete foundation was built on two pontoons, Fig. 5. Upon completion the pontoons were ballasted and the foundation body was hauled, floating with its own buoyancy, to the site of assembly with the lower steel structure. Here, the prefabricated components of the lower steel structure, with the shape of four tripods, were set in place by floating cranes and aligned. The recesses in the foundation body, provided for the joints connecting the lower steel structure to the foundation, were filled with concrete. The assembled lower structure with foundation now was a stable floating unit which was towed to the site at sea, ballasted and sunk in place in September of 1974, Fig. 6.

Simultaneously with these operations, the deckhouse with superstructure and the upper tubular steel structure were built, and assembled on a large pontoon at a German ship yard, Fig. 7. this upper portion of the platform, which like the lower portion is fully treated with preservatives, was ready to be set on top of the lower steel structure at sea in the fall of 1974. However, as stated above, an early start of severe winter weather conditions in the area was the cause for postponement of the last steps of the completion of the platform to the spring of 1975. Then the upper structure will be towed to the site at sea and lifted onto the lower structure already there. A system of hydraulic jacks at the main joints just above the sea level allows the compensation for any possible inclination of the foundation and lower structure. After such adjustments are made the gaps are filled with fitted ring segments and the seams connecting the upper and the lower structure are welded at sea thus completing the rather complex joints.

All stressing and straining of an ocean platform is, of course, largely of alternating character and reflections on fatigue life do form a central point of consideration in the analysis and surveying phases of the construction. The scantlings of the structure were primarily checked on the basis of maximum stresses. Fatigue considerations were mainly reflected in the quality of welding and extent of inspection required for the welds.

The steels used for the tubular steel structure is grade D, as well as DH32 and DH36 hull structural steel with a minimum yield point of 24, 43 and 36 kp/mm² respectively. These are normalized fine grain steels.

The requirements for the steel of the tubular joints are especially strict with regards to high degree of purity, homogeneity, ductility and isotropy in the inplane and out-of-plane directions. Consequently, the higher strength hull structural steel EH36 was selected for the joints, with requirements increased from the standard specifications for this steel for the joint cans. Here the sulfur content was reduced from 0.04% to 0.01%, a minimum across the plate yield strength of 27 kp/mm² had to be proofed, and a high degree of deoxidation was required. The required minimum yield strength was lowered from 36 to 34 kp/mm² for plate thicknesses larger than 50 mm. The testing of the plates was performed according to the rules of Germanischer Lloyd [4].

The tolerances with regards to roundness of the tubular members were set to ±1% of the outer diameter, and regarding alignment an offset of less than 15% of the wall thickness was required.

To avoid the danger of fatigue cracks high demands were made of the welding workmanship. In the more complex joints, mainly the joints just above the waterline and the joints connecting the deckhouse with the tubular structure, the plates were highly restrained and there was danger of lamellar tearing. To avoid this, the welding material had to show a high degree of ductility and the ductility of the plates had to be retained through the welding process. Generally the joints were manufactured using pre-heating. After completion of the manufacturing process all joints were postweld heat-treated to relieve internal stresses. The characteristics of the welds were specified as supreme quality similar to the specifications of DIN 15018.

The welds are ground with a radius of more than 8 mm and are 100% inspected by ultrasonic tests, with radiographic inspection and magnetic particle testing wherever the findings of the ultrasonic tests were not clear.

5. THE INSTRUMENTATION FOR MEASUREMENTS OF STRUCTURAL RESPONSE

In order to make comprehensive measurements of the static as well as the dynamic response to environmental and service loads possible, the platform is instrumented extensively with strain gages and accelerometers. These measuring devices are installed in addition to the instrumentation necessary to register as closely as possible all environmental conditions.

Strain and acceleration measurements are planned mainly for two purposes. In the first place, the strength and structural integrity of the platform shall be investigated in the beginning as well as during the course of its service life. Secondly, the acquired data shall, in correlation to the measurements of the environmental conditions, be used and analyzed to spread light on several aspects of static and dynamic loading as well as response, for which at the present frequently rather vaguely founded assumptions have to be made when conducting a theoretical analysis.

The strain measuring apparatus comprises strain gages in the foundation, in the tubular members, and in the joints. The concrete foundation is instrumented with 32 uniaxial strain gages. They are arranged tangentially at the locations of the joints connecting the tubular structure to the foundation and half way between these joints, one gage each in the top and the bottom slab.

The instrumentation of the steel structure has the main objective of the determination of magnitude and distribution of axial forces and bending moments in the tubular members. From the distribution of moments in the braces it should be possible to make deductions about the distribution of loading. To keep the number of gages within a reasonable range, only uniaxial gages are installed and not all tubular members are instrumented. Spotwelded strain gages are used and carefully protected for long life. Each member leading to the foundation is instrumented at one cross section. The main corner legs have four gages arranged around the cross section, the bracing system only two at opposite sides, in order to eliminate bending strains and to at least make inferences about the axial forces possible.

Those tubular members, which are expected to be subjected to the most severe loadings and which were taken as the basis for the determination of the scantlings in the analysis, are instrumented more thoroughly. The maximum wave loading is for the site of the platform expected to predominantly come from a north westerly direction. The analysis has shown, that with regards to such waves the legs at the south west corner may be expected to get the highest loading. The tubular members of the south west corner are, therefore, instrumented at 3 cross sections each, with four strain gages arranged at 90° intervals. Thus it shall be possible to obtain results about the axial forces as well as the magnitude and distribution of moments over the length of the members.

Some additional members are fitted with strain gages, in order that the member forces of all elements connected at those joints, which are instrumented for the determination of hot spot stresses, can be determined and a clear relation between member forces and hot spot stresses established and compared with the theoretical predictions.

One of each of the joint types of the tubular structure, i.e. the joint above the water line, and the two types of joints below the waterline, are instrumented for the determination of the stress concentration factors for the hot spots. Strain gage rosettes are selected here and applied with adhesives to the inside of the tubes for better protection. Although the absolute maxima for surface stresses are expected to arise on the outside of the chords, the location of application was chosen to be in those areas, where the finite element analysis of the respective joint showed the relatively maximal stresses under different load conditions. After establishing relations between experimental and theoretical results it should be possible to conclude about the maximum stresses on the outside of the chords as well.

Accelerometers are installed at selected joints and in the deckhouse for the investigation of the dynamic response of the structure. Four biaxial transducers for the vertical and the tangential direction are installed above the joints of the diagonal braces in the deckhouse so that global motions of the deckhouse in all six degrees of freedom can be measured. Each of the four tubular joints above the waterline are fitted with triaxial accelerometers, as these are the joints most vulnerable to motions. In addition, several of the underwater joints are equipped with bi- or triaxial transducers, again with the south west corner of the structure being most extensively instrumented.

Besides the instrumentation for strain and acceleration measurements just described, the platform is equipped with devices to measure the seaway, current, and orbital motions of the waters, the pressure distributions around tubular members at two locations below the waterline and one location above, temperature and wind. The data acquisition system is laid out for both the safeguarding of the structural integrity and the research activities. 30 of 60 channels which being used for the safeguarding work and are connected to graphical display units and alarm trigger systems.

One of the first activities planned with the instrumentation is the investigation of the dynamic behavior of the platform, in order to make a calibration of the analytical model possible. Both, the lower natural frequencies of the whole platform is well as the damping characteristics will be investigated. For the determination of the natural frequencies excitation may come from a mechanical exciter or, in relatively calm water, from the random excitations from the seaway. Assuming that the stiffness matrix of the analytical model closely describes the actual stiffness conditions, the mass matrix including the added hydrodynamic masses can be adjusted such that the calculated and measured results agree closely.

To get a realistic idea of the damping conditions an experiment will be conducted, where the platform will get an impulse loading and the decrements of the vibrational amplitudes are recorded and evaluated. The impulse loading can come from a tug boat, exerting a force on the platform through a cable with a breaking link, breaking at a known magnitude of cable force. Forces of this type may be applied in several directions in order to excite predominantly horizontal vibrations in a given direction or torsional modes. With the stiffness, mass and global damping characteristics thus determined, calculations of the magnitudes of response to be expected for the future of the platform may then be performed. Should, on the other hand, the experiments indicate danger of resonance with excitation from waves and currents for the platform, it is at this stage possible and it may be necessary to change the mass distribution of the structure through changes in ballasting or by adding weights, in order to modify the natural frequencies of the platform or of structural components.

6. CONCLUSION

The fixed ocean platform “Nordsee” is rather unique in design and objectives. The principle aims of research carried out with this platform as a base will obviously be of interest to oceanographers, meteorologists and marine biologists. The experience with design, analysis and construction are thought to be of value to the structural analyst and designer. For him the real merits of the activities with this platform may, however, lie in the knowledge to be accrued from its operation and the experimental capabilities and programs of structural research now being planned for it.

7. ACKNOWLEDGMENT

regarding results presented in this paper the authors wish to acknowledge the kind permission of the German Babcock and Wilcox Co. to reproduce the results for the joint analysis and to Mr. Klimke, who carried it out. Thanks are also due to IMS and Germanischer Lloyd for their support in preparing the paper.

REFERENCES

[1] Knabe, S.; Longrée, W.D.;
Jungk, K.
“Research Platform at Helgoland”,
Meeres technik, vol 5 (1973), No. 3

[2] Kirchoff, W.; Knabe, S.;
Vieregge, S. et al.
„Die Forschungsplattform
Nordsee“, Schiff
und Hafen, vol 26 (1974), No. 8

[3] Marshall, P.W.
„General Considerations for
Tubular Joint Design”,
Engineering Note No. 42,
(Sept. 1973), Shell Oil Co.,
Offshore Div., New Orleans

[4] “Rules for the Classification and
Construction of Seagoing Steel
Ships”,
Germanischer Lloyd (1973),
Hamburg, vol III.

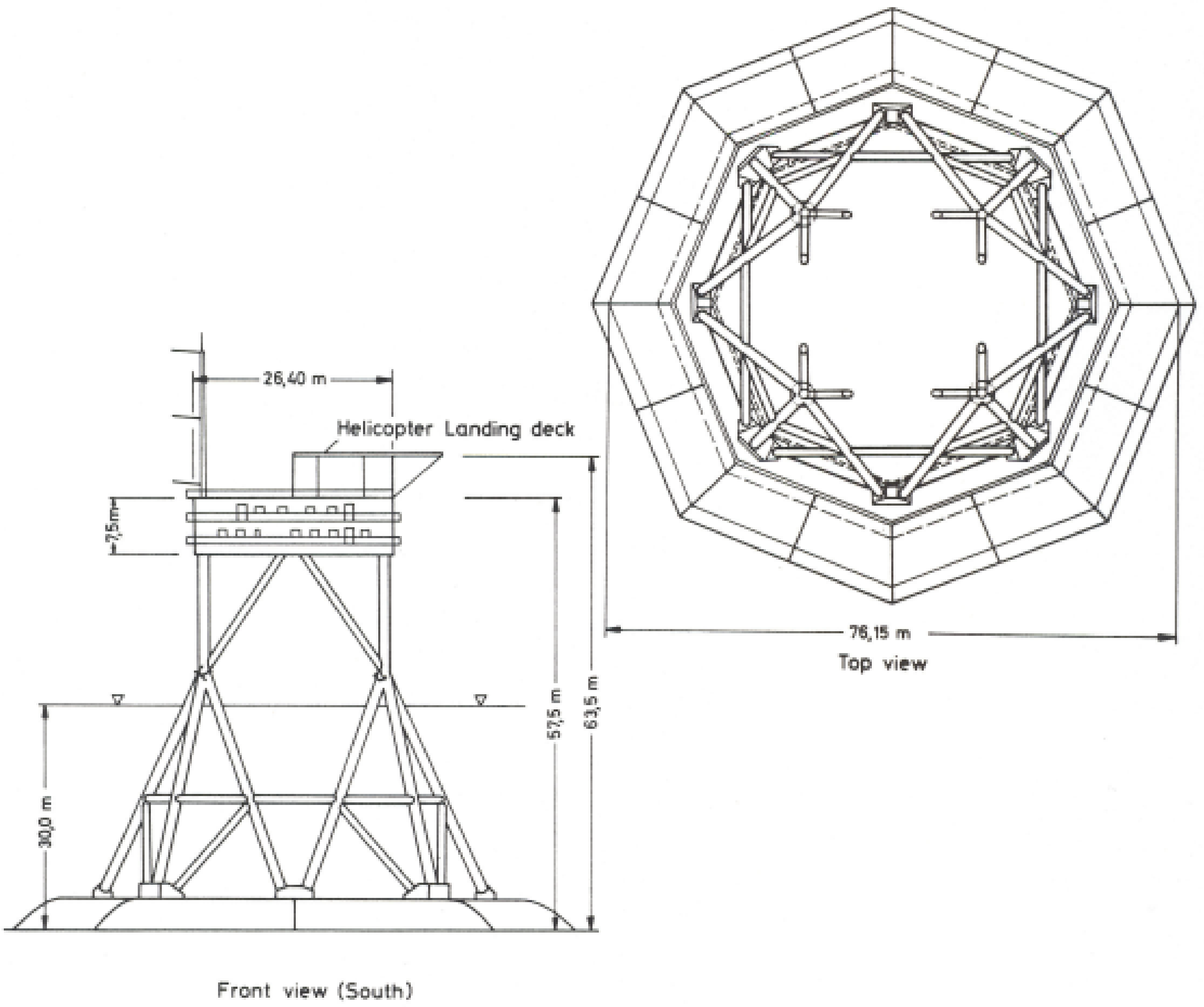

Fig. 1 - Overall view of the research ocean platform “Nordsee”.

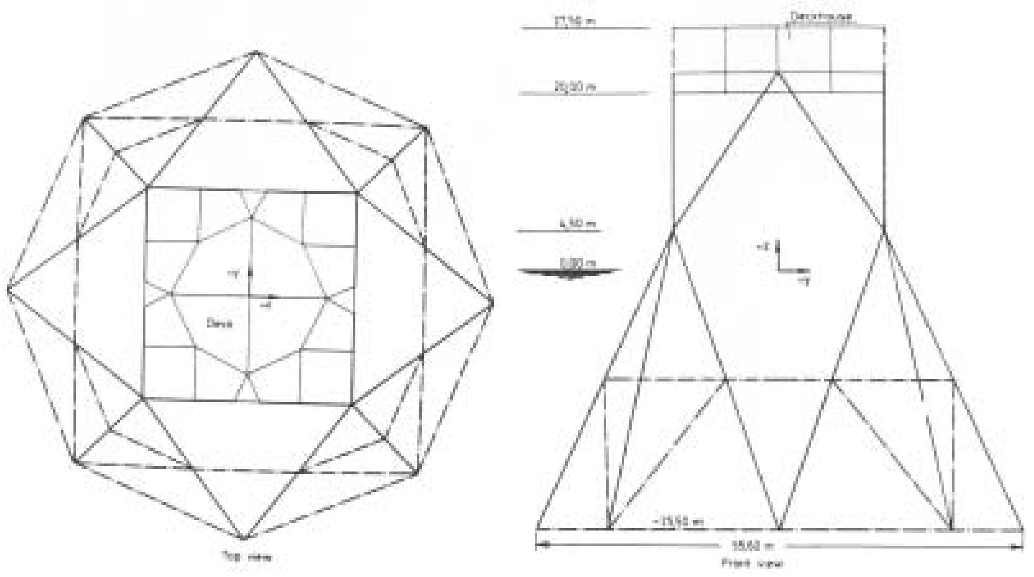

Fig. 2 - Spatial frame idealization for research platform.

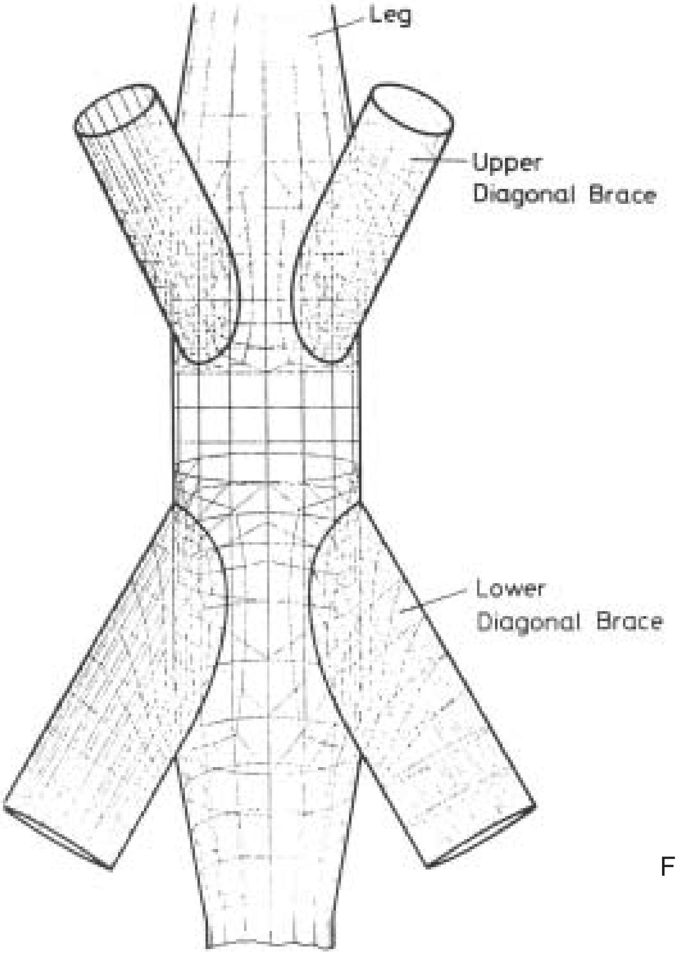

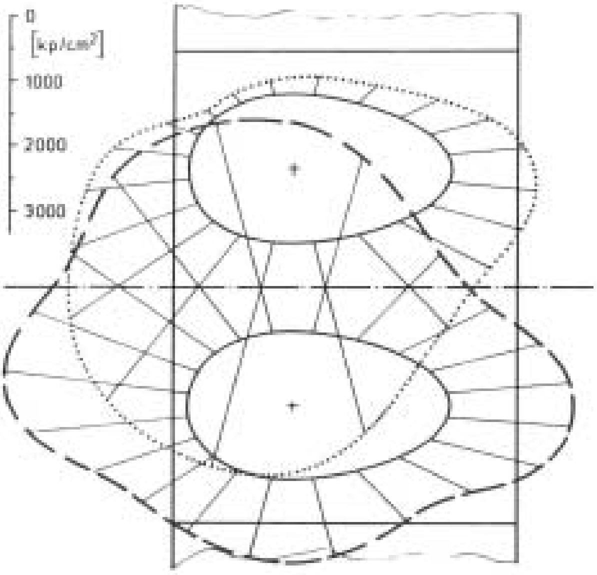

Fig. 4 - Equivalent surface stresses in leg, close to the connection of the upper diagonal braces for maximum design loads.

Fig. 3 - Finite element idealization of tubular joint.

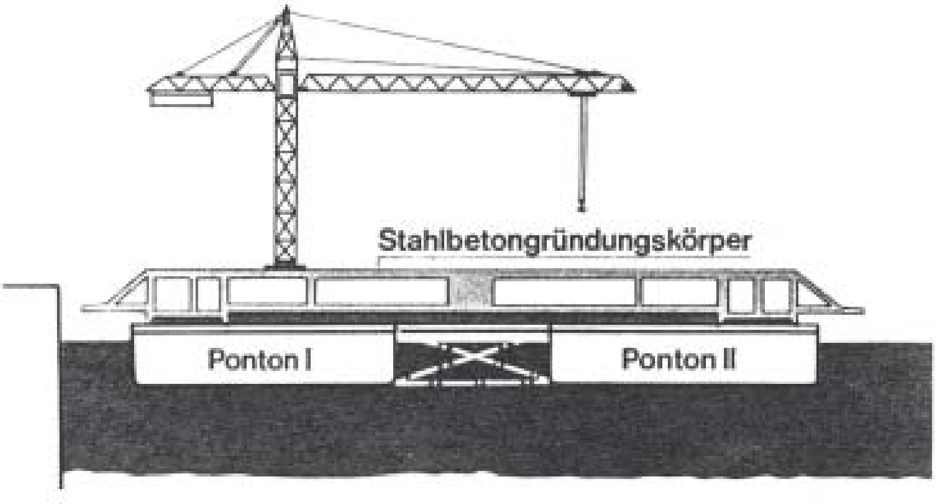

Fig. 5 - Building of the concrete foundation on two pontoons.

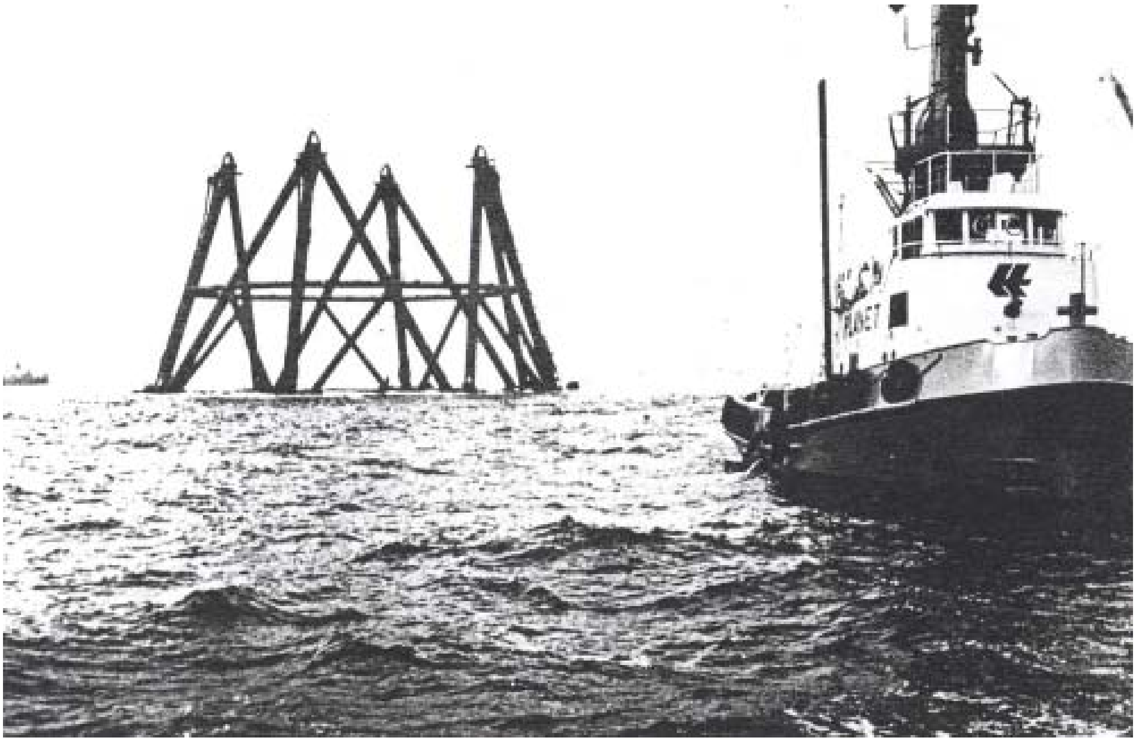

Fig. 6 - Towing of the floating foundation with the lower tubular structure to the North Sea site.

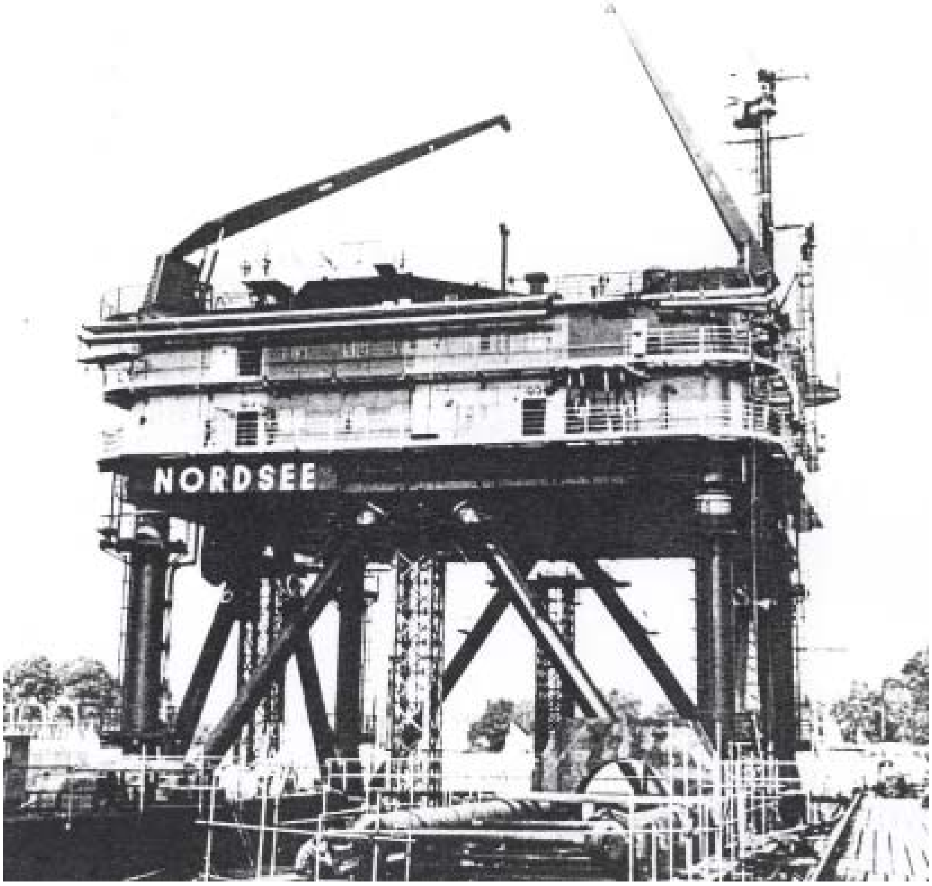

Fig. 7 - Deckhouse and upper tubular structure assembled at the building yard.